technical manual for

QUASAR

ZACCARIA

SWITCH 1 «3M»

	1	2	3	4	5	6	7	8	
Coin mechanism 1			ON	ON					2 coins 1 play
			OFF	ON					1 coin 1 play
			ON	OFF					1 coin 2 plays
			OFF	OFF					1 coin 3 plays
Coin mechanism 2	ON	ON							1 coin 1 play
	OFF	ON							1 coin 2 plays
	ON	OFF							1 coin 3 plays
	OFF	OFF							1 coin 5 plays
Nº Rockets					ON	ON			3 rockets
					OFF	ON			4 rockets
					ON	OFF			5 rockets
					OFF	OFF			6 rockets
SERVICE							ON		Normal game
							OFF		Free game
								ON	"Test" excl. collis.
								OFF	"Game" incl. collis.

SWITCH 2 «3N»

	1	2	3	4	5	6	7	8	
High score (H.S.)	ON	X	X						Normal "H.S."
	OFF	OFF	ON						Low "H.S." 10000-11500
	OFF	ON	OFF						Med. low "H.S." 12500-14000
	OFF	OFF	OFF						Med. high "H.S." 15000-16500
	OFF	ON	ON						High "H.S." 17500-19000
Game difficulties				ON	ON				Easy game
				OFF	ON				Medium game
				ON	OFF				Difficult game
				OFF	OFF				Very difficult game
Extended play						ON	ON		No extended
						OFF	ON		5500 points 1 rocket
						ON	OFF		7500 points 1 rocket
						OFF	OFF		9500 points 1 rocket
OPTIONAL								ON	Rocket leaves the screen
								OFF	Rocket stops the sides

Note : X = ON or OFF condition is the same

SOUND SWITCH

1	2	3	4	
ON				Test
OFF		ON	OFF	Sound Quasar

Notes:
1) Switch 2 is not used
2) No use other combination

SWITCHES ADJUSTMENT

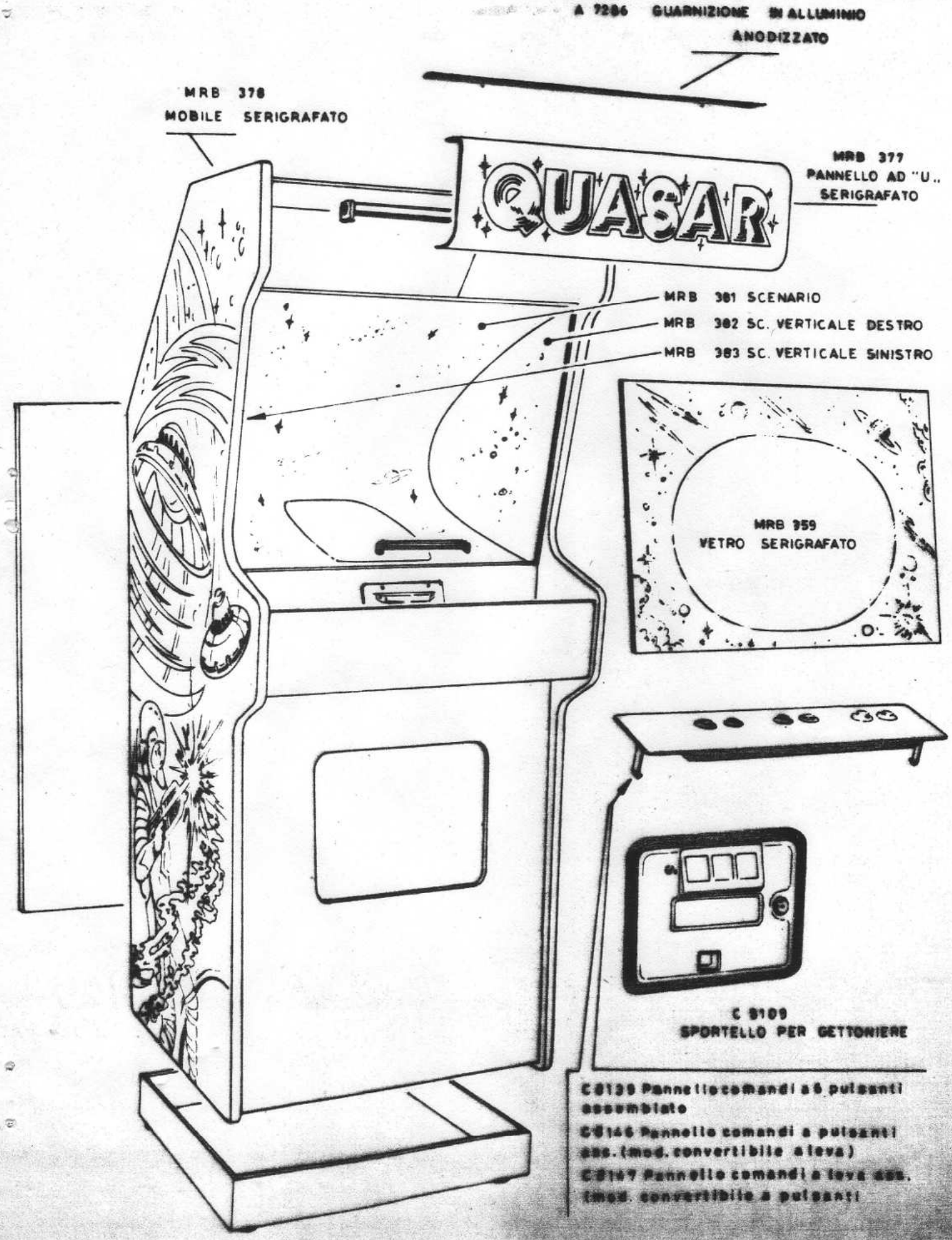
A 7286 GUARNIZIONE IN ALLUMINIO ANODIZZATO
MRB 378 MOBILE SERIGRAFATO
QUASAR
MRB 377 PANNELLO AD "U" SERIGRAFATO
MRB 381 SCENARIO
MRB 382 SC. VERTICALE DESTRO
MRB 383 SC. VERTICALE SINISTRO
MRB 359 VETRO SERIGRAFATO
C 9109 SPORTELLO PER GETTONIERE
C 8139 Pannello comandi a 5 pulsanti assumbiato
C 8146 Pannello comandi a pulsanti ass. (mod. convertibile a leva)
C 8147 Pannello comandi a leva ass. (mod. convertibile a pulsanti

C 8139 Pannello comandi a 6 pulsanti

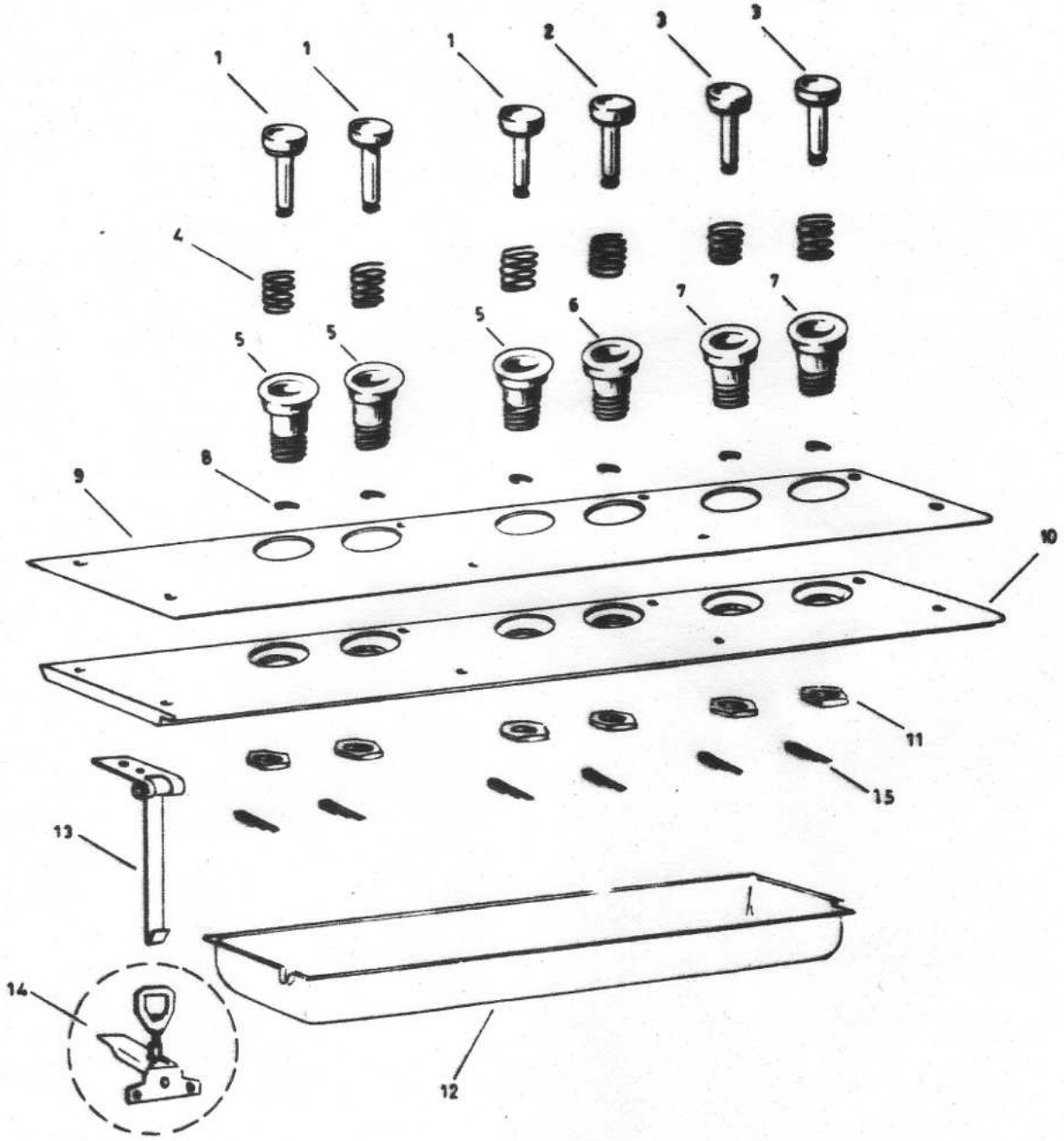

C 8139 Pannello comandi a 6 pulsanti

1	B 6113	Pulsante verde
2	B 6130	Pulsante rosso
3	B 6114	Pulsante bianco
4	A 4272	Molla richiamo pulsante
5	A 5213	Corpo pulsante verde
6	A 5225	Corpo pulsante rosso
7	A 5211	Corpo pulsante bianco
8	A 4202	Anello DIN mm. 6
9	MRB 371	Mascherina comando serigrafata
10	FB 085	Tavoletta in legno
11	A 5214	Dado ferro zinc. 16MA fiss. corpo pulsante
12	A 7194	Scatola protezione pacchi lamellari
13	B 6118	Cerniera con tirante
15	B 9021	Pacco lamellare

14	B 6115	Bloccaggio a leva regolabile

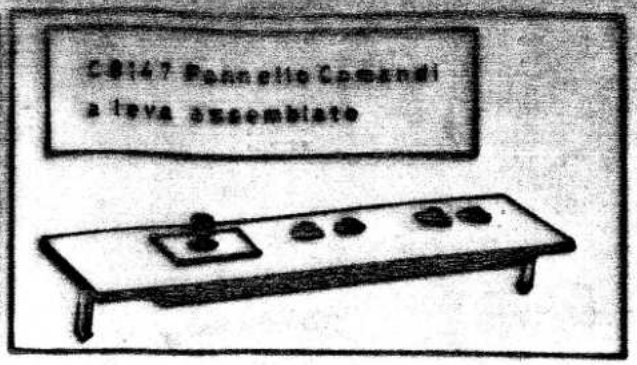

Tavoletta con componenti di di base per l'assemblaggio nelle 2 versioni

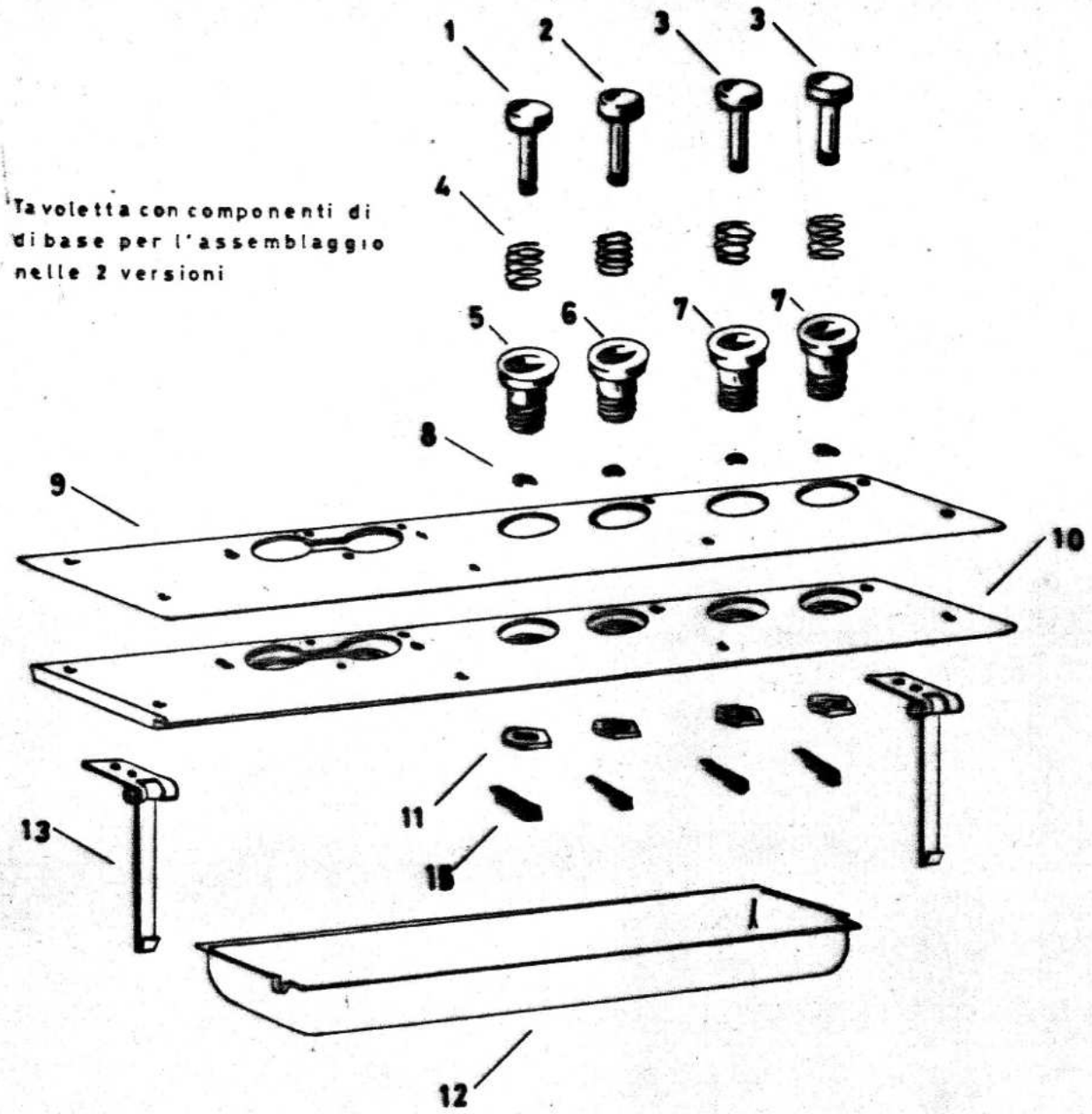

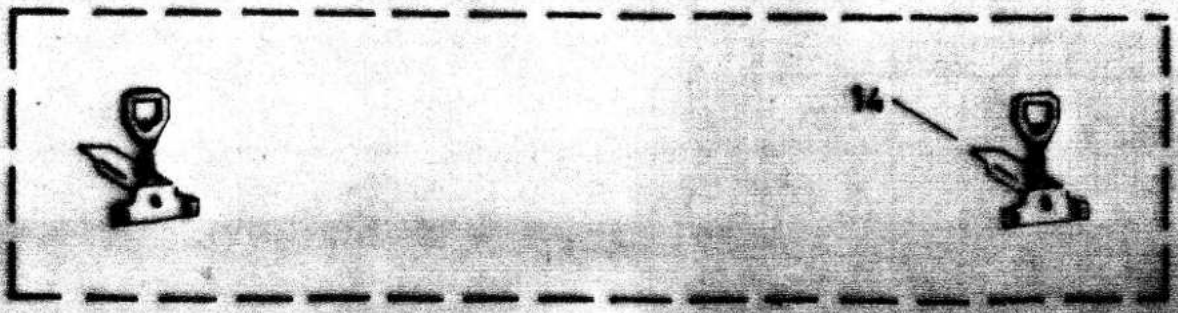

COMPONENTI DI BASE PER L'ASSEMBLAGGIO NELLE 2 VERSIONI

1	B 6113	Pulsante Verde
2	B 6130	Pulsante Rosso
3	B 6114	Pulsante Bianco
4	A 4272	Molla Richiamo Pulsante
5	A 5213	Corpo Pulsante Verde
6	A 5225	Corpo Pulsante Rosso
7	A 5211	Corpo Pulsante Bianco
8	A 4202	Anello DIN
9	MRB384	Mascherina di Comando in Plexiglass Serig."QUASAR" per comandi alternati
10	FB 090	Tavoletta in Legno Unificata per Comando a Pulsanti e a Leva "QUASAR"
11	A 5214	Dado Ferro Zinc. 16 MA Fiss. corpo Pulsanti
12	A 7314	Scatola Protezione Pacchi Lamellari in ABS Termoformato per "QUASAR"
13	B 6118	Cerniera con Tirante
14	B 6115	Bloccaggio a Leva Regolabile
15	B 9021	Pacco Lamellare

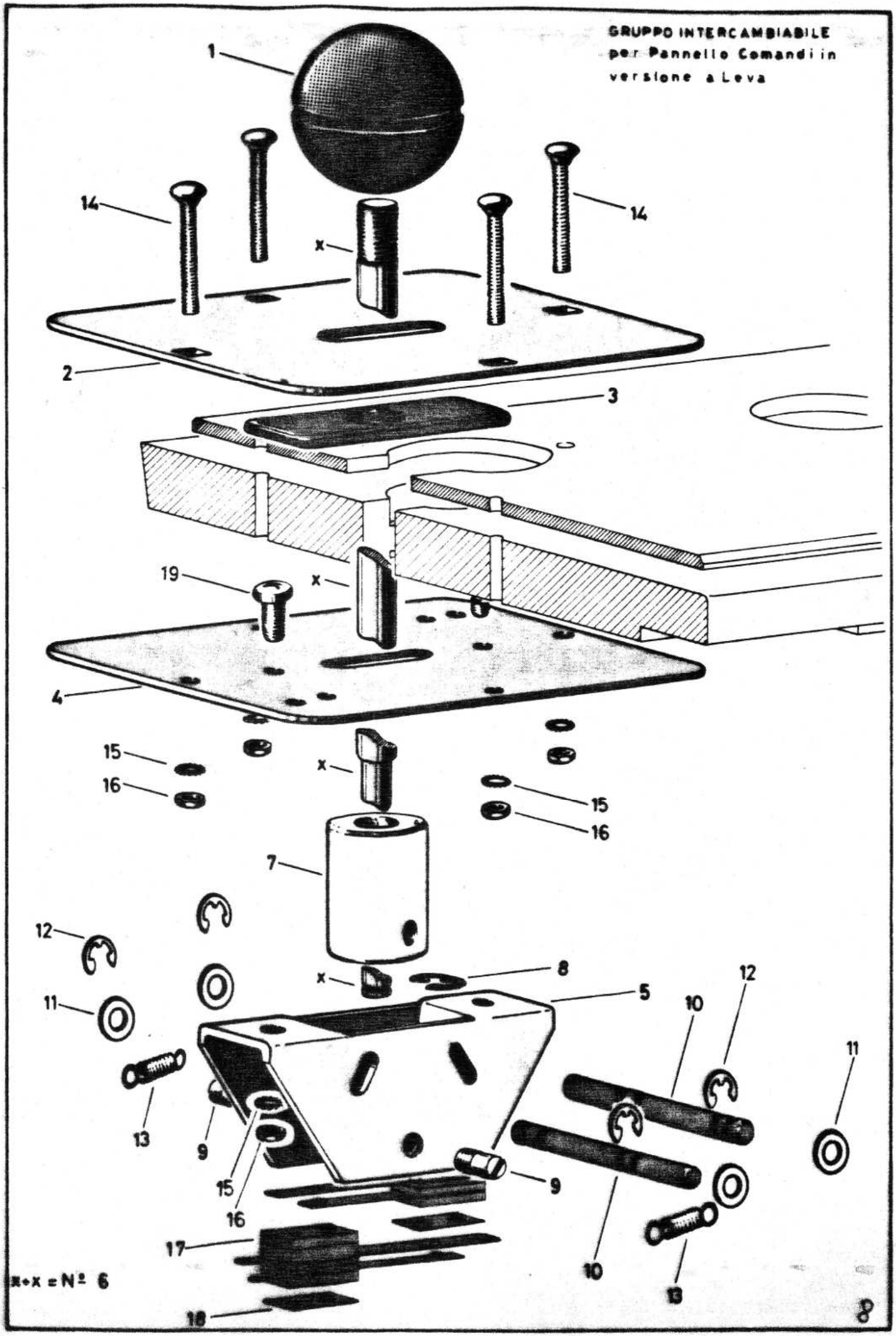
GRUPPO INTERCAMBIABILE
per Pannello Comandi in
versione a Leva
1
14
14
x
2
3
19
x
4
15
16
x
15
16
7
12
8
x
5
11
10
12
11
13
9
15
16
9
17
10
13
18
x+x = N° 6
8

GRUPPO INTERCAMBIABILE per Pannello Comandi in Versione a Leva

1	A 4498	Pomello Nero in Bachelite ø 35 x ø 8MA
2	A 6238	Piastrina INOX sup. per Comando a Leva a 2 Posizioni
3	A 4501	Piastrina in Plexiglass Antipolvere
4	A 6237	Piastrina INOX inf. per Comando a Leva a 2 Posizioni
5	A 6239	Supporto Leva di Comando Zinc.
6	A 4495	Leva Comando Porta Pomello Cromata
7	A 4497	Componente Leva di Comando
8	A 4034	Anello d' Arresto øi mm. 5
9	A 4494	Perno Ottone Filettato Fulcro Leva
10	A 4496	Alberino Comando Pacco Lamellare
11	A 4499	Rondella Isolante øi 5,2x10x1
12	A 4212	Anello d'Arresto øi mm. 4
13	A 4500	Molla Richiamo Perni
14	A 6097	Vite Ferro Zinc. TT.qst. 4MA x 25
15	A 4064	Rondella Dent. øi 4,2 brunita
16	A 4107	Dado Ferro Zinc. 4MA x ch. 7 x sp. 4
17	B 9021	Pacco Lamellare
18	A 6020	Piastrina Copri Pacco Lamellare
19	A 4117	Vite Ferro Zinc. TT.tcr. 4MA x 8

GRUPPO INTERCAMBIABILE
per Pannello Comandi in
versione a Pulsanti

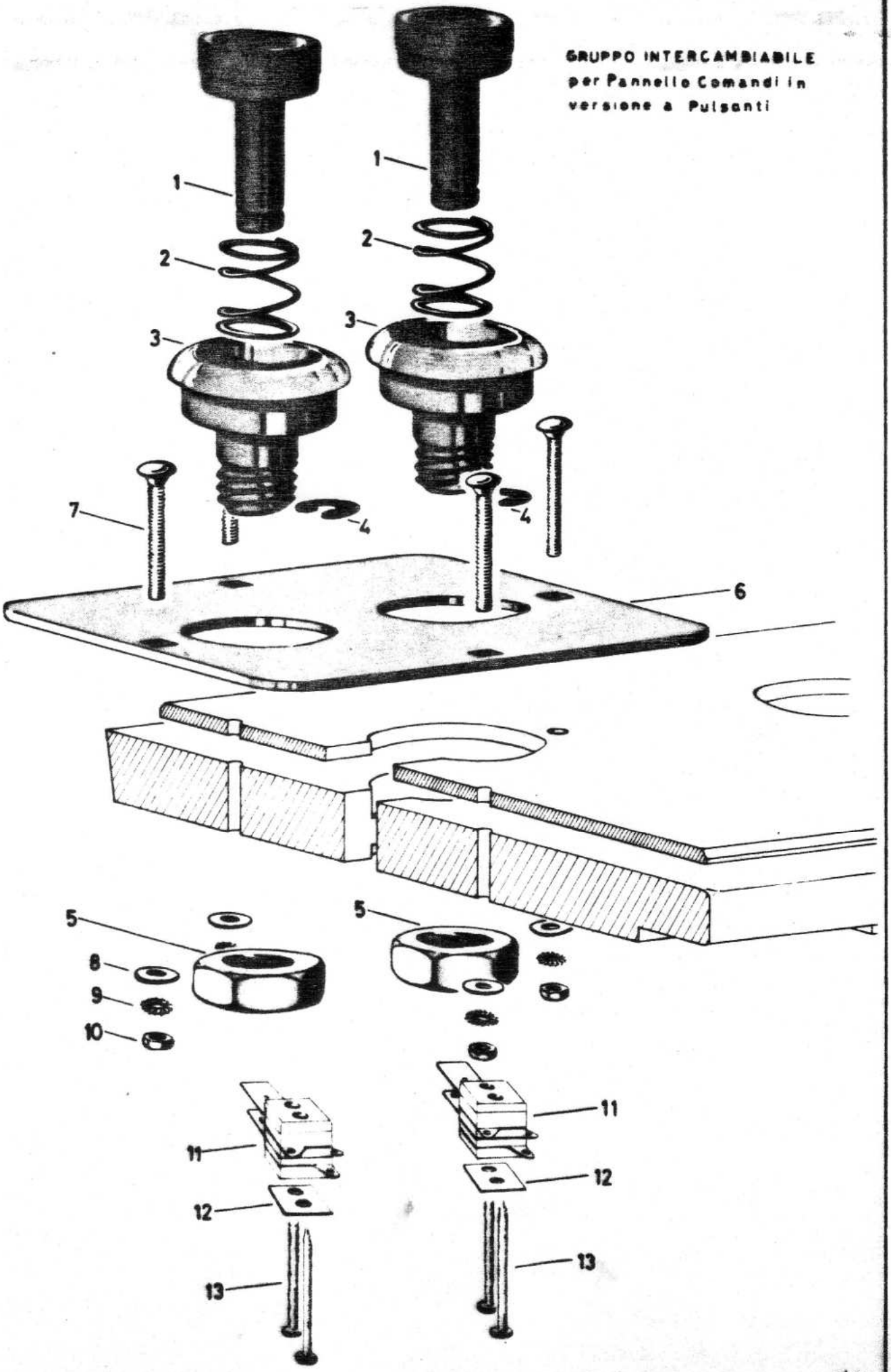

GRUPPO INTERCAMBIABILE per Pannello Comandi in Versione a Pulsanti

1	B 6113	Pulsante Verde
2	A 4272	Molla Richiamo Pulsante
3	A 5213	Corpo Pulsante Verde
4	A 4202	Anello DIN mm. 6
5	A 5214	Dado Ferro Zinc. 16 MA Fiss. Corpo Pulsante
6	A 6236	Piastrina INOX Porta Pulsanti
7	A 6097	Vite Ferro Zinc. TT.qst. 4MA x 25
8	A 4008	Rondella Ferro Zinc. Øe 12 x 4,3 x 1,5
9	A 4064	Rondella Dent. Øi 4,2 Brunita
10	A 4107	Dado Ferro Zinc. 4MA x 7 x 4
11	B 9021	Pacco Lamellare
12	A 6020	Piastrina Copri Pacco Lamellari
13	A 4231	Vite Autof. TCB.tcr. Ø 2,9 x 25,4

C 8109

SPORTELLO PER GETTONIERE ASSEMBLATO

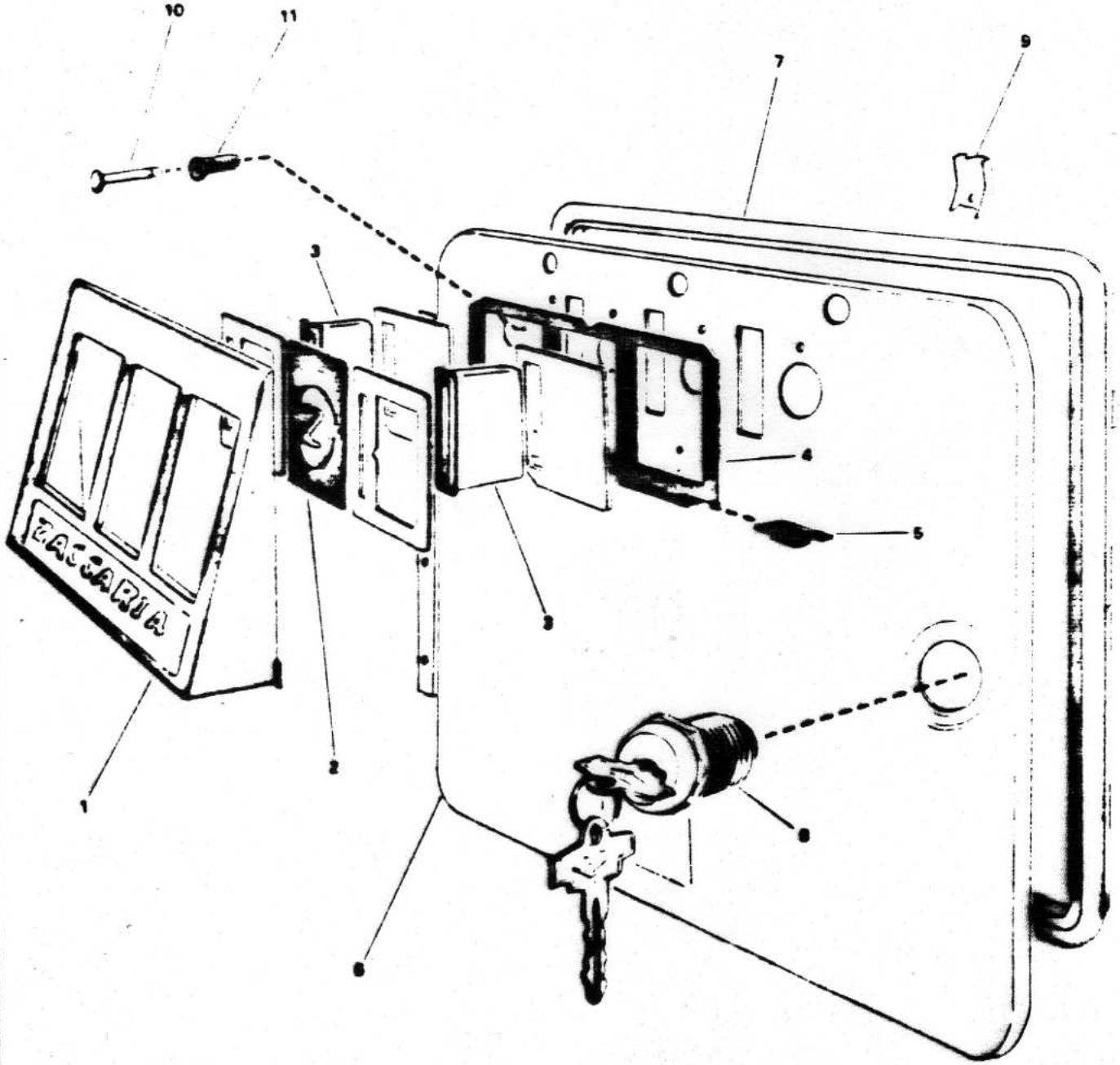

C 8109 Sportello per gettoniere assemblato

1	ASB 116	Frontalino sportello con cerniera
2	A 5009	Piastrina con marchio
3	A 6008	Guida moneta in plastica
4	A 7005	Componente fissaggio accessori
5	A 4383	Piastrina semidoppia
6	B 7194	Sportello con cerniera
7	A 7236	Cornice in alluminio pressofuso
8	B 7153	Serratura
9	A 6201	Staffa fissaggio cornice
10	A 4031	Pulsante scarto moneta
11	A 4032	Componente per pulsante

C 8109 SPORTELLO PER GETTONIERE ASSEMBLATO

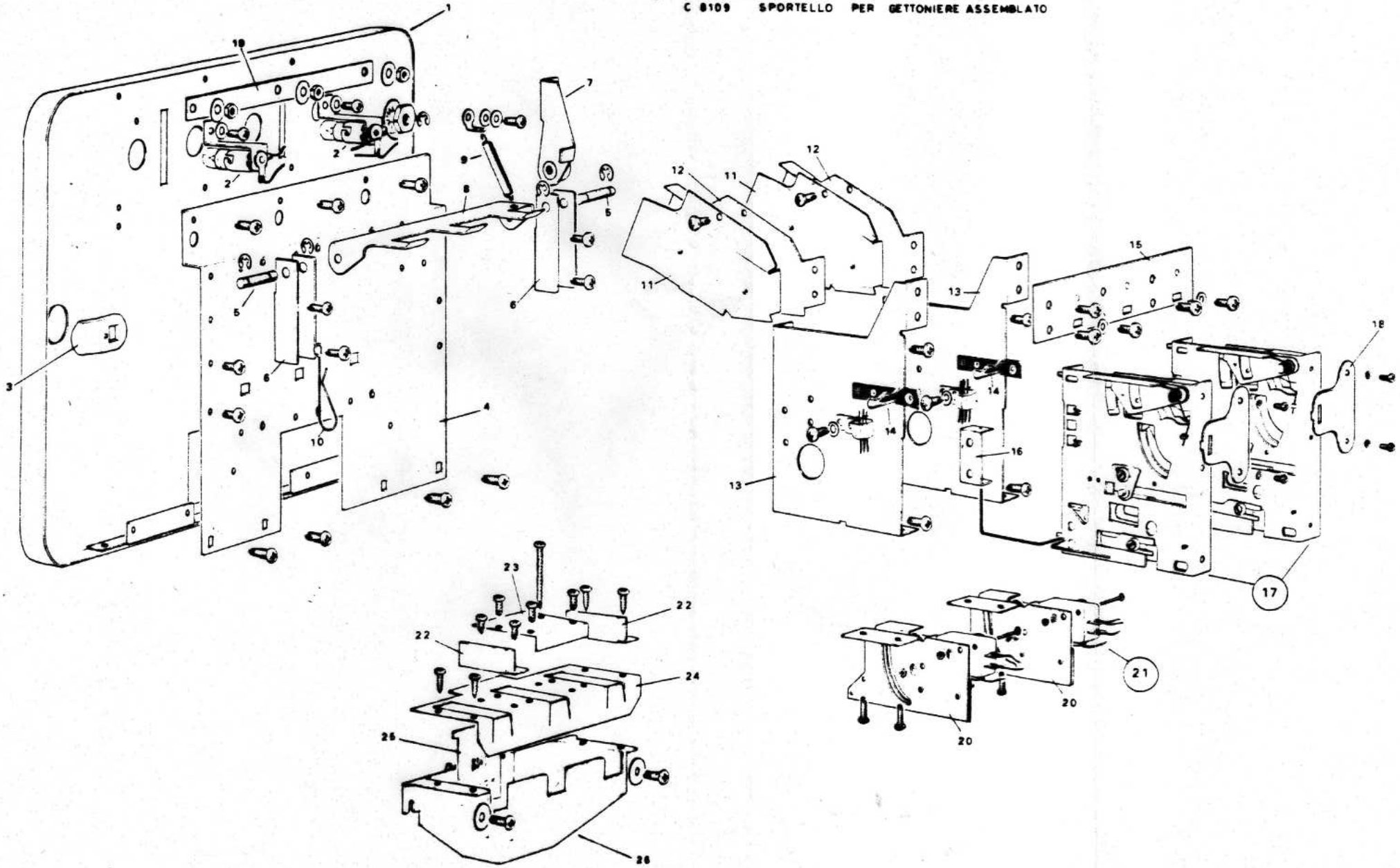

C 8109 Sportello per gettoniere assemblato

1	B 7194	Sportello con cerniera completo di accessori
2	B 5029	Porta lampada alto sportello
3	A 4328	Leva per serratura sportello
4	A 7002	Piastra supporto gettoniere
5	A 4005	Perno per cavallotto sportello
6	A 6001	Cavallotto sportello
7	B 6001	Leva con boccola
8	A 6002	Leva di scarto gettoniera
9	A 5201	Molla richiamo leva di scarto
10	A 5021	Ferretto porta chiave sportello
11	A 7009	Scorrimonete maschio
12	A 7008	Scorrimonete femmina
13	B 7006	Supporto gettoniere
14	A 5252	Forcellina fissaggio gettoniera
15	A 5014	Piastrina accoppiamento supporto gettoniera
16	A 5015	Componente per asta arresto monete
17	B 7083	Gettoniera L. 50
"	B 7084	" L.100
"	B 7175	" L.200
"	B 7092	" 25 Cents
"	B 7096	" 5 F
"	B 7097	" 10 F
"	B 7098	" 5 P
"	B 7099	" 10 P
"	B 7147	" 50 P
"	B 7111	" 0,50 pfg
"	B 7112	" 1 DM
"	B 7113	" 2 DM
"	B 7114	" 5 DM
"	B 7128	" 1 FS
"	B 7129	" 2 FS
"	B 7148	" 10 Fr belgi
"	B 7233	" 5 Dinari
"	B 7234	" 10 Dinari
18	A 5114	Piastrina fissaggio gettoniera
19	A 5006	Asta per frontalino
20	B 6109	Piastra porta micro
21	B 5053	Micro nero
"	B 5054	" rosso
"	B 5055	" bianco
22	A 5012	Squadretta a 2fori
23	A 5010	Squadretta a 4fori
24	A 6009	Copertura per raccoglitore monete
25	A 5011	Cancellette
26	AS 1028	Raccoglitore in plastica

PIASTRINE SERIGRAFATE

& Introduzioni Monete

AUSTRALIA

p.ser B 5056
in m. A 5007

AUSTRIA

p.ser B 5045
in m. A 5006

p.ser B 5047
in m. A 5007

BELGIO

p.ser B 5035
in m. A 5006

p.ser B 5034
in m. A 5007

p.ser = PIASTRINA serigrafata

DANIMARCA & SVEZIA

p.ser B 4074
in m. A 5007

p.ser B 5065
in m. A 4401

p.ser B 5066
in m. A 5007

FRANCIA & SVIZZERA

p.ser B 5024
in m. A 5006

p.ser B 5025
in m. A 5007

p.ser B 5060
in m. A 4401

GERMANIA

p.ser B 4059
in m. A 5008

p.ser B 4060
in m. A 5007

p.ser B 4041
in m. A 5007

GIAPPONE

p.ser B 5051
in m. A 4399

p.ser B 5052
in m. A 4398

in m. = PIASTRINA introduzione moneta

INGHILTERRA

p.ser B 4062
in m. A 5007

p.ser B 4091
in m. A 4401

ITALIA

p.ser B 5001
in m. A 5007

p.ser B 6136
in m. A 5942

JUGOSLAVIJA

p.ser B 4081
in m. A [illegible]

p.ser B 4082
in m. A 5007

LIBANO

p.ser B [illegible]
in m. A [illegible]

p.ser B [illegible]
in m. A 5007

OLANDA

p.ser B 4085
in m. A [illegible]

UNGHERIA

p.ser [illegible]
in m. [illegible]

USA & CANADA

p.ser B 5046
in m. A [illegible]

p.ser B [illegible]
in m. A 5007

B 6110 CONTATORE

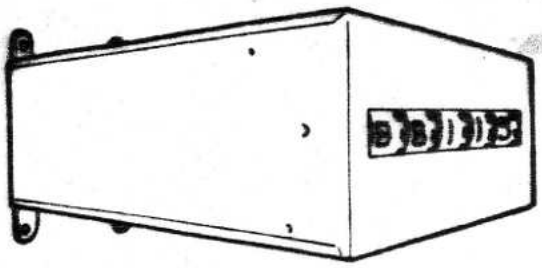

B 7235 SUPPORTO VENTILATORE

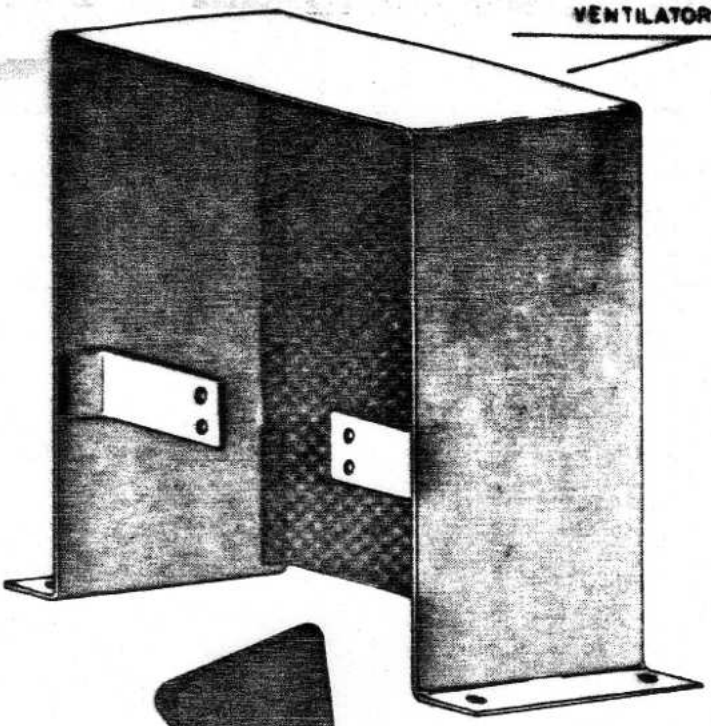

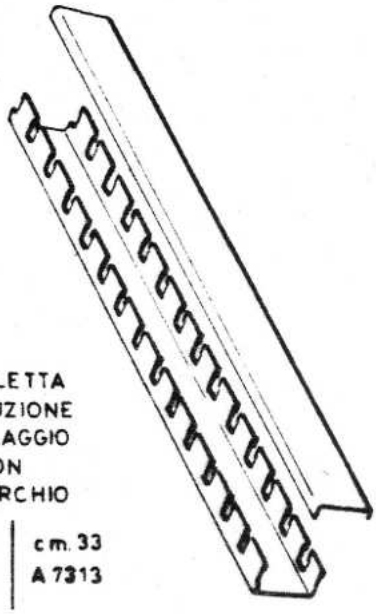

CANALETTA CONDUZIONE CABLAGGIO CON COPERCHIO

cm. 47	cm. 33
A 7312	A 7313

AS 1066 VENTOLA IN PLASTICA A 3 PALE (VA 130 A)

B 7240 MOTORE PER VENTOLA ASSIALE (VA 130 A)

A 7308 PROTEZIONE PER SCHEDA GIOCO

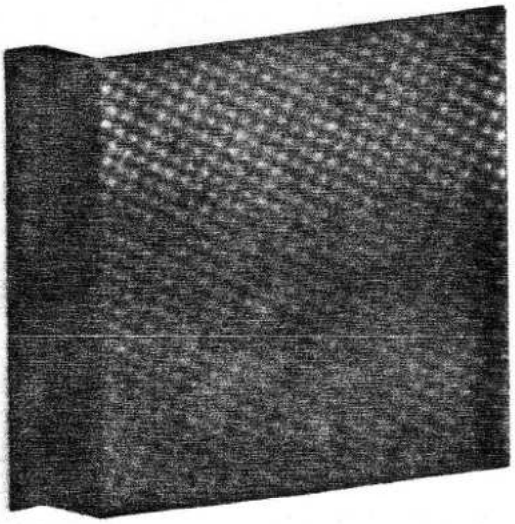

CE 2018 ALTOPARLANTE

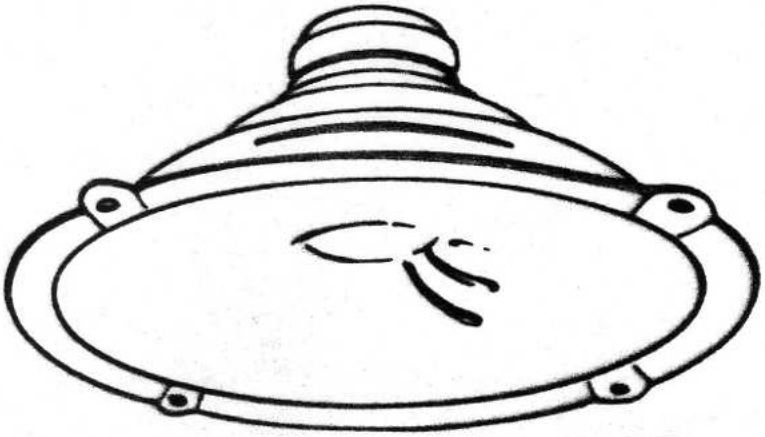

ASB 118 PROTEZIONE ALTOPARLANTE

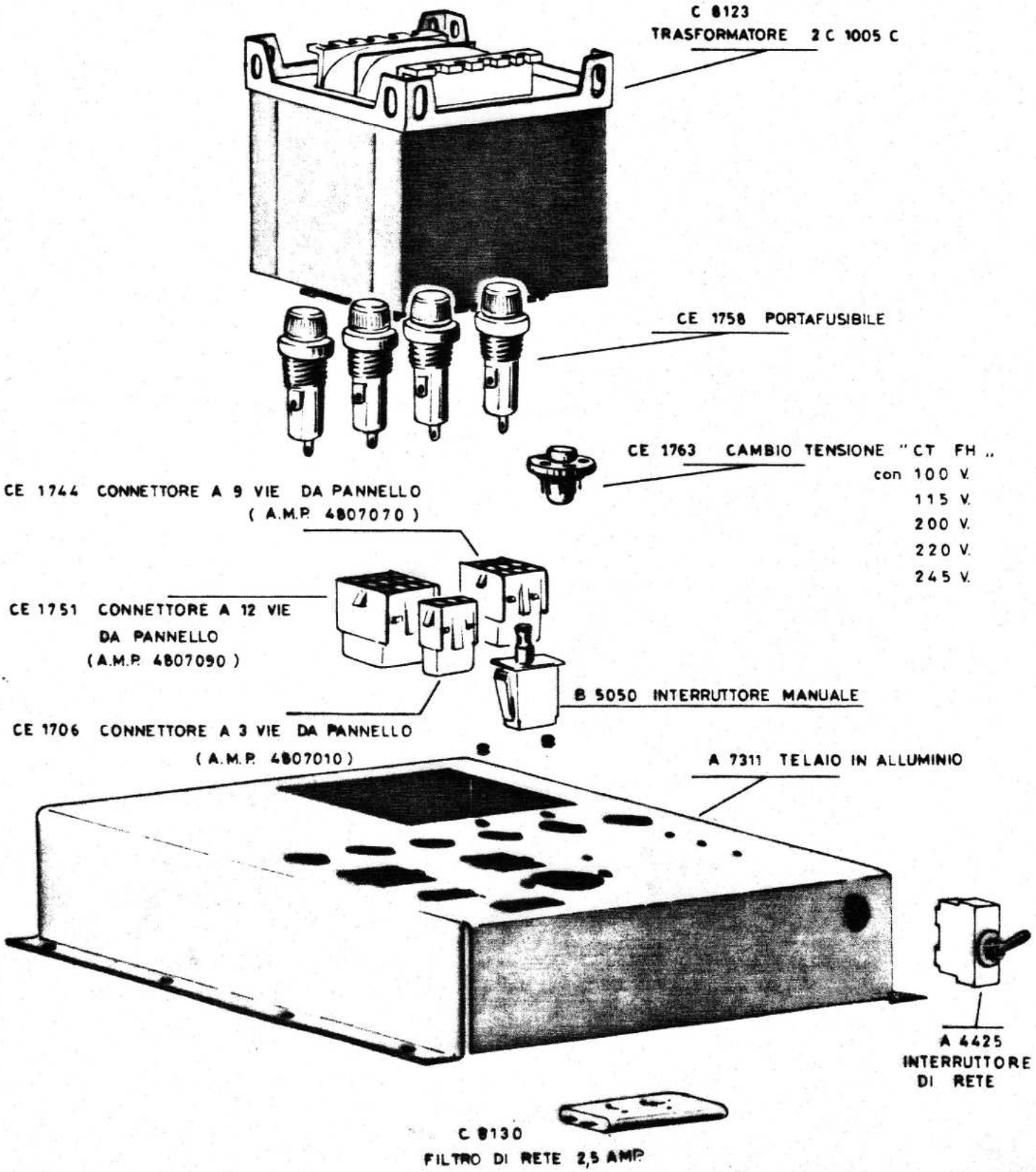
C 8123
TRASFORMATORE 2 C 1005 C
CE 1758 PORTAFUSIBILE
CE 1763 CAMBIO TENSIONE "CT FH"
con 100 V.
115 V.
200 V.
220 V.
245 V.
CE 1744 CONNETTORE A 9 VIE DA PANNELLO
(A.M.P. 4807070)
CE 1751 CONNETTORE A 12 VIE
DA PANNELLO
(A.M.P. 4807090)
B 5050 INTERRUTTORE MANUALE
CE 1706 CONNETTORE A 3 VIE DA PANNELLO
(A.M.P. 4807010)
A 7311 TELAIO IN ALLUMINIO
A 4425
INTERRUTTORE
DI RETE
C 8130
FILTRO DI RETE 2,5 AMP.

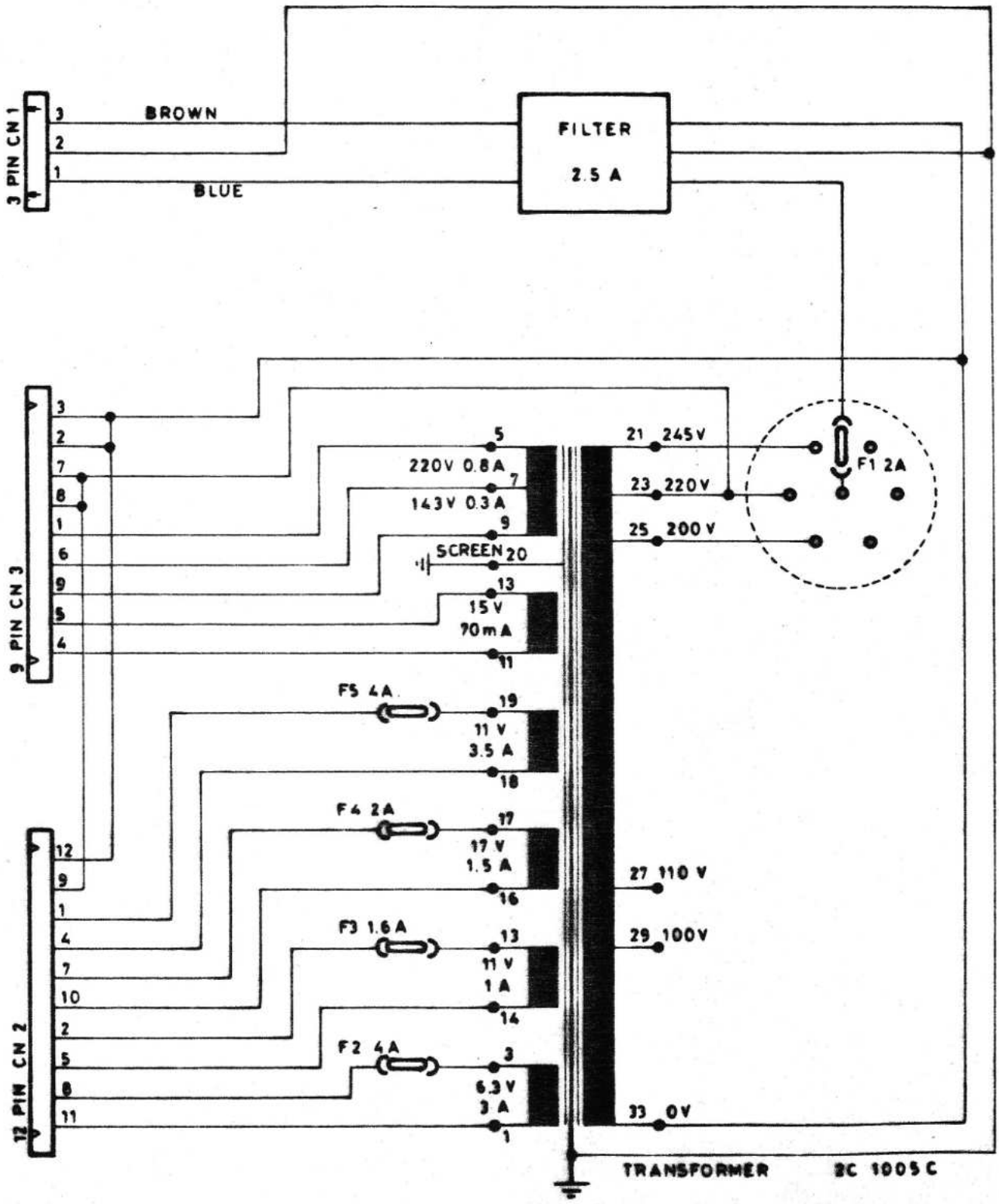

F.LLI ZACCARIA s.n.c.
Via Amendola, 15 - 40012 CALDERARA DI RENO (Bo) Italy

PART NAME TELAIO ALIMENTAZIONI - QUASAR -				PART NO. CEC 094
DWN.	DATE 5-11-80	REV.	DATE REV.	SHEET 1 of 1

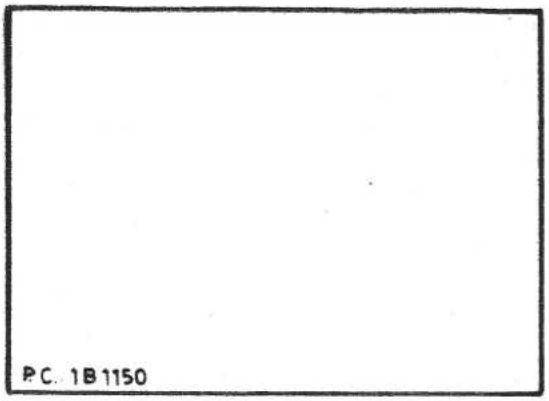

CEB 065 – C.P.U. QUASAR WITHOUT MEMORY

CEC 081 – C.P.U. QUASAR WITH MEMORY

CEB 069 – INTEGRATED "1B 1151"

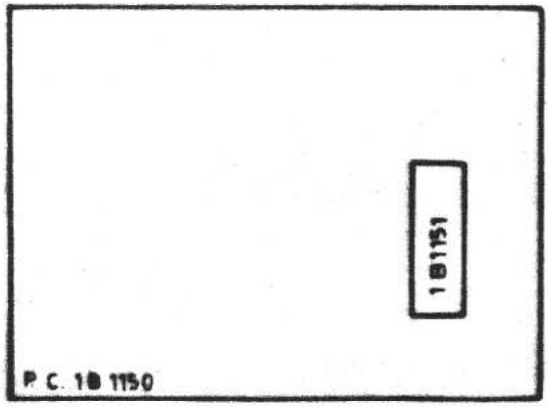

CEC 082 C.P.U. QUASAR WITH MEMORY & INTEGRATED "1B 1151"

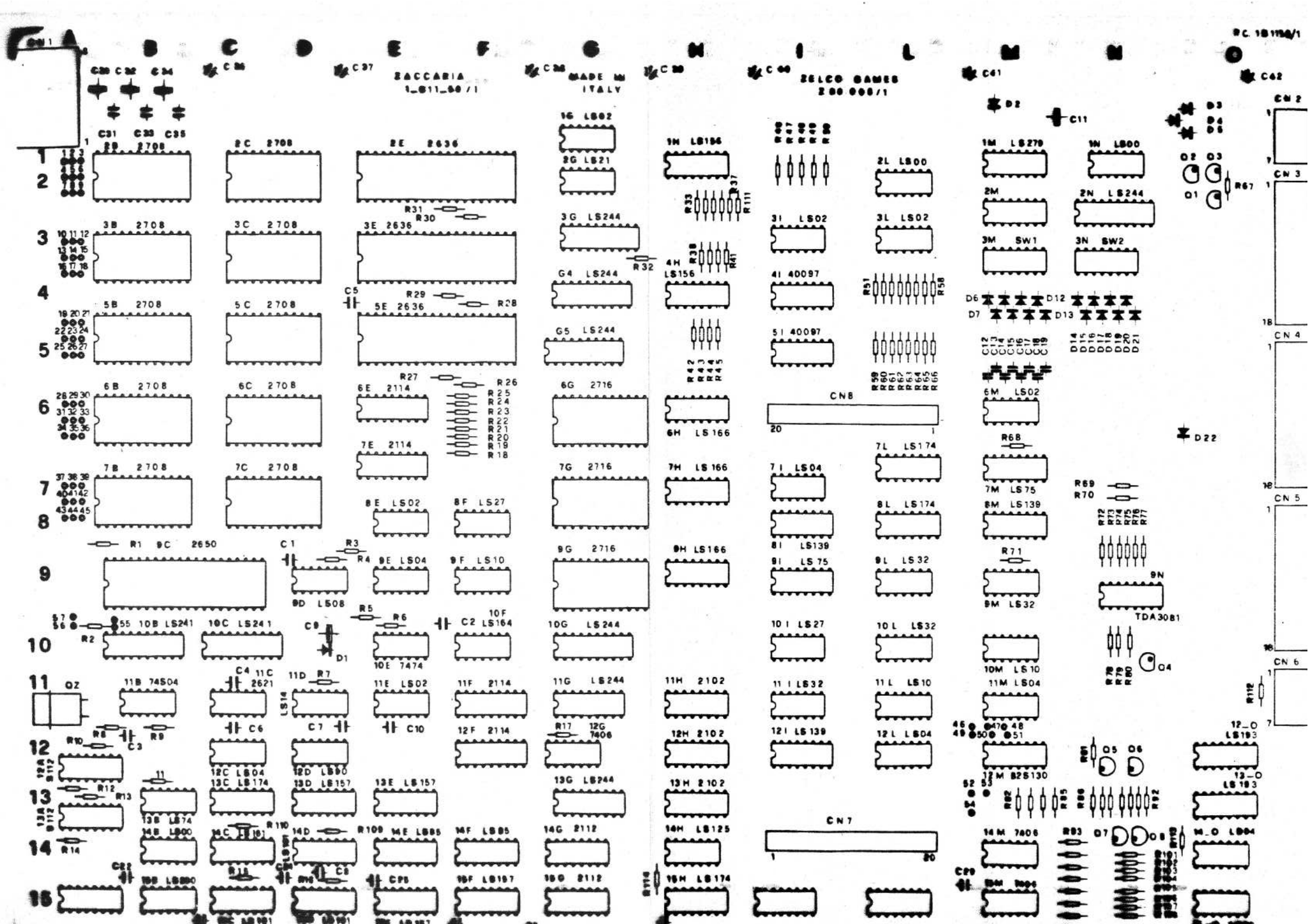
SACCARIA
MADE IN ITALY
ZELCO GAMES
CN 2
CN 3
CN 4
CN 5
CN 6
CN 7
CN 8
TDA3081

C.P.U. BOARD "QUASAR" WITHOUT MEMORY [illegible]

DC 1B 1150/1

Component list

C.P.U. BOARD "QUASAR" WITH MEMORY GBC 081

ITEM No	PART DESIGNATION	CODE PART No	DESCRIPTION	Quantity No
1	P.C.	CE 2105	PRINTED CIRCUIT 1B1150/1 280-008	1
2	CN1	CE 1361	MALE CONNECTOR 8 CONTACTS 90° Mod	1
3	CN2-CN6	CE 1337	FEMALE " 7 " a C.S.CIS	2
4	CN3-CN4-CN5	CE 1336	" " 18 " a C.S.CIS	3
5	IC14B-2L-1N-15O	CE 1134	INTEGRATED CIRCUIT 74 LS 00	4
6	IC8E-11E-1G-3I-3L-6M	CE 1143	" " 74 LS 02	6
7	IC 11B	CE 1647	" " 74 S 04	1
8	IC12C-9E-7I-12L-11M	CE 1133	" " 74 LS 04	5
9	IC12G-14M-15M	CE 1526	" " 74 LS 06(06)	3
10	IC9D	CE 1145	" " 74 LS 08	1
11	IC9F-11L-1Ø M	CE 1146	" " 74 LS 10	3
12	IC11D-14O	CE 1177	" " 74 LS 14	2
13	IC2G	CE 1138	" " 74 LS 21	1
14	IC8F-1ØI	CE 1142	" " 74 LS 27	2
15	IC11I-9L-1ØL-9M	CE 1147	" " 74 LS 32	4
16	IC13B-1ØE	CE 1141	" " 74 LS 74	2
17	9I-7M	CE 1509	" " 74 LS 75	2
18	IC14E-14F	CE 1748	" " 74 LS 85	2
19	IC12D	CE 1752	" " 74 LS 90	1
20	IC12A-13A	CE 1587	" " 74 S 112	2
21	IC14H	CE 1698	" " 74 LS 125	1
22	IC8I-12I-8M	CE 1670	" " 74 LS 139	3
23	IC 1H-4H	CE 1432	" " 74 LS 156	2
24	IC13C-13D-13E-15E-15F	CE 1433	" " 74 LS 157	5
25	IC14C-15C-14D-15D	CE 1131	" " 74 LS 161	4
26	IC 1ØF	CE 1663	" " 74 LS 164	1
27	IC6H-7H-9H	CE 1662	" " 74 LS 166	3
28	IC7L-8L-IC15H	CE 1524	" " 74 LS 174	3
29	IC12O-13O	CE 1128	" " 74 LS 193 (40193)	2
30	IC15O	CE 1672	" " 74 LS 260	1
31	IC1ØB-1ØC-3G-4G-5G-			
	1ØG-11G-13G-2N	CE 1589	" " 74 LS 244	9
32	IC1M	CE 1001	" " 74 LS 279	1
33	IC9N	CE 1225	" " TDA 3081	1
34	IC4I-5I	CE 1055	" " [illegible] 40097	2
35	IC11H-12H-13H	CE 1126	" " 2102	3
36	IC14G-15G	CE 1482	" " 2112	2
37	IC6E-7E-11F-12F	CE 1661	" " 2114	4
38	IC11C	CE 1571	" " 2621	1
39	IC2E-3E-5E	CE 1570	" " 2636	3
40	IC9C	CE 1668	" " 2650	1
41	IC12M	CE 1156	" " 82 S 130	1
42	IC3M-3N	CE 1480	DIP SWITCH 8 CONTACTS	2
43	R1-3-5-7-15-16-26-31			
	68-71-72-75-77-79-86			
	[illegible]-1Ø2-1Ø6-1Ø9-11Ø	CE 1165	CARBON RESISTOR A.TRONM 1/4W 5%	24
44	R2-11-14-17-32-90-87-			
	73-74-76-78-81-111-114	CE 1164	" " A.BROWN 1/4W 5%	20
45	R4	CE 1078	" " [illegible] 1/4W 5%	1

ITEM No	PART DESIGNATION	CODE PART No	DESCRIPTION	Quantity No
46	R6-10-12-13-69-70-80			
	97-100-112-113	CE 1170	CARBON RESISTOR 1KOHM 1/4W 5%	12
47	R8-9-59÷66-88-92-104-			
	108	CE 1163	" " 470 OHM 1/4W 5%	14
48	R18÷25-87	CE 1171	" " 10KOHM 1/4W 5%	9
49	R82÷85	CE 1392	" " 680 OHM 1/4W 5%	4
50	R51÷58-89-93-94-105	CE 1024	" " 3,3KOHM 1/4W 5%	12
51	R91-103-107	CE 1079	" " 12KOHM 1/4W 5%	3
52	R95-101	CE 1417	" " 3,9KOHM 1/4W 5%	2
53	R96-98	CE 1166	" " 220 OHM 1/4W 5%	2
54	C1	CE 1029	CAPACITOR 10000pF DISC CERAMIC	1
55	C2-22÷29-31-33-35÷42	CE 1005	" 0,1MF DISC CERAMIC	19
56	C3-7-8-10	CE 1159	" 1000pF DISC CERAMIC	4
57	C4-6-12÷20	CE 1473	" 330pF DISC CERAMIC	11
58	C5	CE 1257	" 100pF DISC CERAMIC	1
59	C9	CE 1100	" 10MF ELECTROLYTICHORIZON	1
60	C11-30-32-34	CE 1162	" 100MF " "	4
61	D1-6÷21	CE 1011	DIODE 1N 4148	17
62	D2-3÷5-22	CE 1009	" 1N 4004	5
63	Q1-5÷8	CE 1438	TRANSISTOR BC548	5
64	Q2÷4	CE 1290	" BC337	3
65	Q21	CE 1415	QUARTZ MHz 14,31818	1
66	CN1-CN2 xRAM EFFETTI	CE 1757	TE 20WS1	2
67	IC2B-3B-5B-6B-7B			
	6G-7G-9G	CE 1687	INTEGRATED CIRCUIT 2716	8
68	IC2C-3C-5C-6C-7C	CE 1364	" " 2708	5
69		CE 1053	14 PIN SOCKET	1
70		CE 1495	24 PIN SOCKET	13
71		CE 1494	40 PIN SOCKET	4
	7B ("TYPE Q.1")	RE 147	B 2716 MOS I.C. 2048x8 EPROM	1
	6B ("TYPE Q.2")	RE 148	B 2716 MOS I.C. 2048x8 EPROM	1
	5B ("TYPE Q.3")	RE 149	B 2716 MOS I.C. 2048x8 EPROM	1
	3B ("TYPE Q.4")	RE 150	B 2716 MOS I.C. 2048x8 EPROM	1
	2B ("TYPE Q.5")	RE 151	B 2716 MOS I.C. 2048x8 EPROM	1
	9G ("TYPE BK1")	RE 152	B 2716 MOS I.C. 2048x8 EPROM	1
	7G ("TYPE BK2")	RE 153	B 2716 MOS I.C. 2048x8 EPROM	1
	6G ("TYPE BK3")	RE 154	B 2716 MOS I.C. 2048x8 EPROM	1
	7C ("TYPE Q.6")	RE 155	B 2708 MOS I.C. 1024x8 EPROM	1
	6C ("TYPE Q.7")	RE 156	B 2708 MOS I.C. 1024x8 EPROM	1
	5C ("TYPE Q.8")	RE 157	B 2708 MOS I.C. 1024x8 EPROM	1
	3C ("TYPE Q.9")	RE 158	B 2708 MOS I.C. 1024x8 EPROM	1
	2C ("TYPE Q.10")	RE 159	B 2708 MOS I.C. 1024x8 EPROM	1
	12M ("TYPE Q. ")	RE 160	TTL I.C. 256x4 PROM	1

ZELCO GAMES
Z 80 000
8/CPU
8/2716
10/LS373
1/1010
12/556
11/556
8/4011
4/4007
8/4098
6/LM 1458
7/6810

[redacted] BOARD WITHOUT MEMORY [redacted] SEC 1B 1152

Component Ref

BOOK BOARD WITH MEMORY SEC 083

ITEM No	PART DESIGNATION	CODE PART No	DESCRIPTION	Qnty No
1	P.C.	CE 2107	PRINTED CIRCUIT 1B 1152 280-009	1
2	CN1	CE 1332	MALE CONNECTOR 6 C. 90° MODU 1	1
3	CN2	CE 1336	FEMALE " 18 C. a C.S. CIS	1
4	IC1	CE 1434	INTEGRATED CIRCUIT TDA 1010	1
5	IC2	CE 1394	" " MEF 4002	1
6	IC3	CE 1015	" " 4069	1
7	IC4	CE 1055	" " 40097	1
8	IC5	CE 1016	" " 4011	1
9	IC6	CE 1730	" " MC 1408	1
10	IC7	CE 1728	" " 6810	1
11	IC8	CE 1729	" " 8035	1
12	IC9	CE 1687	" " 2716	1
13	IC10	CE 1681	" " 74 LS 373	1
14	IC 11-12	CE 1031	" " NE 555	2
15	R1	CE 1306	CARBON RESISTOR 4,7 OHM 1/4W 5%	1
16	R2	CE 1447	" " 330KOHM 1/4W 5%	1
17	R3-5-12-14-22-25	CE 1193	" " 47KOHM 1/4W 5%	6
18	R4-17-19-20	CE 1170	" " 1KOHM 1/4W 5%	4
19	R6÷8-11-13-34÷37-42	CE 1165	" " 4,7KOHM 1/4W 5%	10
20	R9	CE 1251	" " 33KOHM 1/4W 5%	1
21	R10	CE 1164	" " 2,2KOHM 1/4W 5%	1
22	R15-16-18-26-30÷33	CE 1171	" " 10KOHM 1/4W 5%	8
23	R21	CE 1601	" " 10 OHM 1/4W 5%	1
24	R23-28-29	CE 1024	" " 3,3KOHM 1/4W 5%	3
25	R24	CE 1023	" " 5,6KOHM 1/4W 5%	1
26	R27	CE 1214	" " 1,3MOHM 1/4W 5%	1
27	R38	CE 1713	" " 82KOHM 1/4W 5%	1
28	R39	CE 1169	" " 560KOHM 1/4W 5%	1
29	R40	CE 1268	" " 150 OHM 1/4W 5%	1
30	R41	CE 1417	" " 1,5KOHM 1/4W 5%	1
31	R43-44	CE 1167	" " 100KOHM 1/4W 5%	2
32	C1	CE 1580	CAPACITOR 1000MF ELECTROLYTIC VERT.	1
33	C2-4-10-16-19-20-25			
	29-33÷36-37	CE 1005	" 0,1 MF DISC CERAMIC	13
34	C3-8-9-17-18	CE 1118	" 100MF ELECTROLYTIC VERT.	5
35	C5	CE 1473	" 330PF DISC CERAMIC	1
36	C6	CE 1206	" 1MF TANTALIUM	1
37	C7-14-15-22÷24-32	CE 1029	" 10000pF DISC CERAMIC	7
38	C11	CE 1718	" 22pF ELECTROLYTIC VERT.	1
39	C12	CE 1720	" 1500pF DISC CERAMIC	1
40	C13	CE 1719	" 3000pF DISC CERAMIC	1
41	C26	CE 1721	" 47pF DISC CERAMIC	1
42	C27	CE 1298	" 22pF DISC CERAMIC	1
43	C21-30	CE 1644	" 10pF ELECTROLYTIC VERT.	2
44	C31-38	CE 1159	" 3000pF DISC CERAMIC	2
45	P1	CE 1598	POTENZIOMETER 10 K	1
46	D1÷7	CE 1011	DIODE 1N 4148	7
47	DZ1	CE 1717	" ZENER 6,8V 0,5W	1
48	Q1	CE 1890	TRANSISTOR BC117	1
49	Q2-3-4	CE 1894	" BF 394	3

Component list — Sheet 2 — RC VB 1152

ITEM No	PART DESIGNATION	CODE PART No	DESCRIPTION	Quant. No
50	Q5	CE 1642	TRANSISTOR BC (320)	1
51	Q6-7	CE 1438	" BC 548	2
52	QZ1	CE 1743	QUARZO MHz 6	1
53	SV1	CE 1356	SWICH 4 CONCTACTS	1
54		CE 1560	TDA 1010 HEAT SINK	1
55			WIRE JUMP	62
	("TYPE S.Q.")	RE 161	B 2716 MOS I.C. 2048x8 EPROM	1

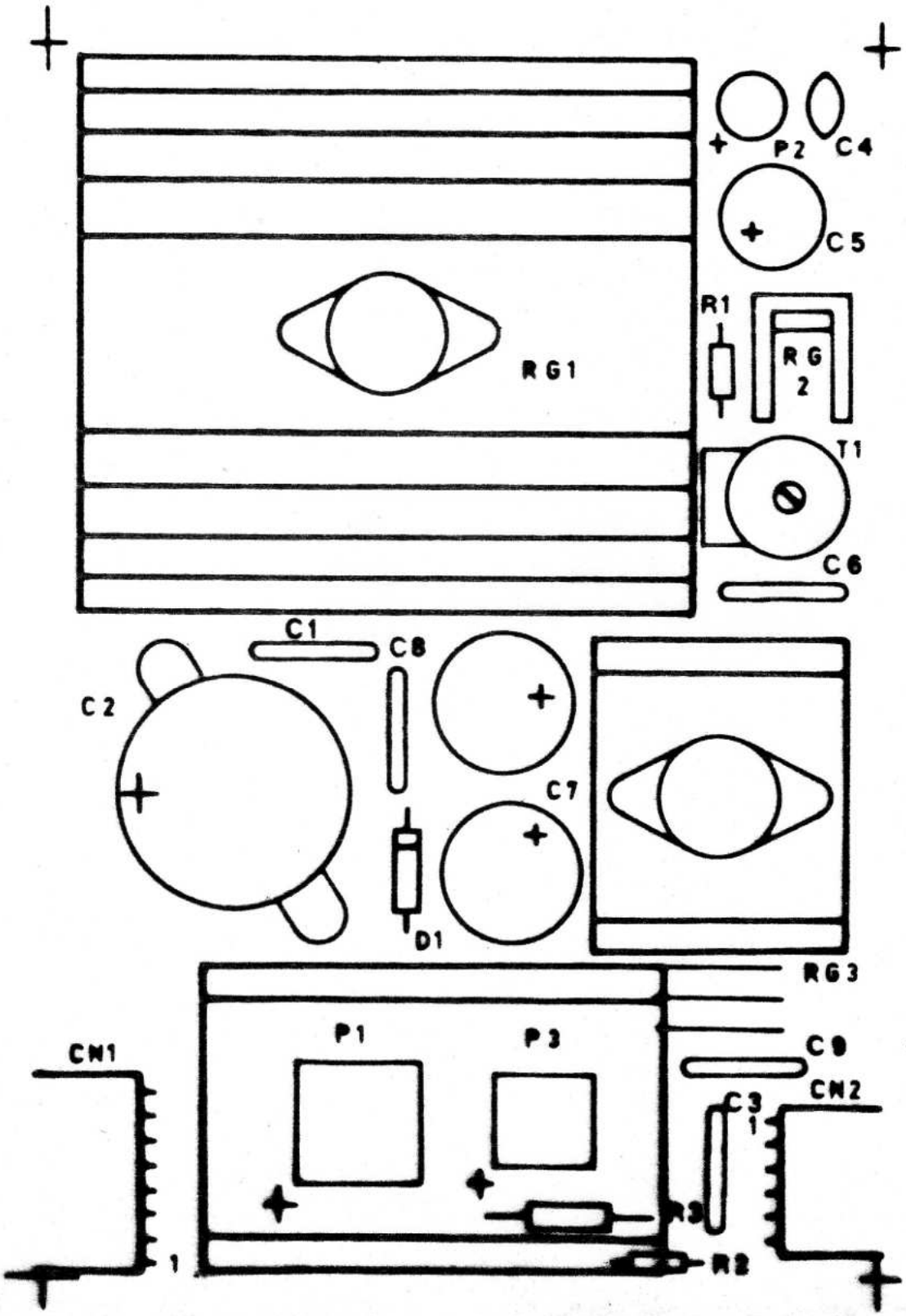
P2
C4
C5
R1
RG 2
RG1
T1
C6
C1
C8
C2
C7
D1
RG3
P1
P3
CN1
C9
CN2
C3
1
R3
R2
1

POWER BOARD ASSEMBLY CEC 032 DC 1B 1126

Component list

ITEM No	PART DESIGNATION	CODE PART No	DESCRIPTION	Quantity No
1	PC 1	CE 2070	Printed Circuit 1B 1126	1
2	P 1	CE 1405	50V. 10 AMP Rect. Brid.(KBPC 10-005)	1
3	P 2	CE 1233	50V. 1 AMP Rect. Brid.(W-005)	1
4	P 3	CE 1276	50V. 3 AMP Rect. Bridge (KBPC 1-005)	1
5	RG 1	CE 1238	+5V. 5 AMP Voltage Regulator (MA 78H05KC)	1
6	RG 2	CE 1648	-5V. 1 AMP Voltage Regulator (MA 7905 UC)	1
7	RG 3	CE 1688	+12V. 1 AMP Voltage Regulator (MA 7812 UC)	1
8	D 1	CE 1299	1N 5400 Diode	1
9	CN 1	CE 1332	6 Pin Modu 1 Male Connector	1
10	CN 2	CE 1361	8 Pin Modu 1 Male Connector	1
11	HS 1	CE 1566	Heat Sink 16/75/2	1
12	HS 2	CE 1278	Heat Sink 41/100/B	1
13	HS 3	CE 1099	Heat Sink ML 26 TO-220	1
14	HS 4	CE 1529	Heat Sink 16/40/B	1
15	C 1-3-6-8-9	CE 1261	0.33MF 50V. Polies. Film Capac.	5
16	C 2	CE 1384	10.000MF 16V. Electr. cap. Sin. Ended	1
17	C 4	CE 1005	0.1MF 50V. Ceramic Capacitor	1
18	C 5	CE 1026	1.000MF 25V. Elec. Cap. Sin. End.	1
19	C 7	CE 1579	2.200MF 25V. Elec. Cap. Sin. End.	2
20	R 1	CE 1170	1 KOHM 1/4W 5% Carbon Resistor	1
21	R 2	CE 1701	18 OHM 20W 10% Wire Resistor	1
22	T 1		47 OHM 1 Turn Vertical Trimmer (Commonly mounted 22 OHM 1/4W 5% Carbon Resistor)	1

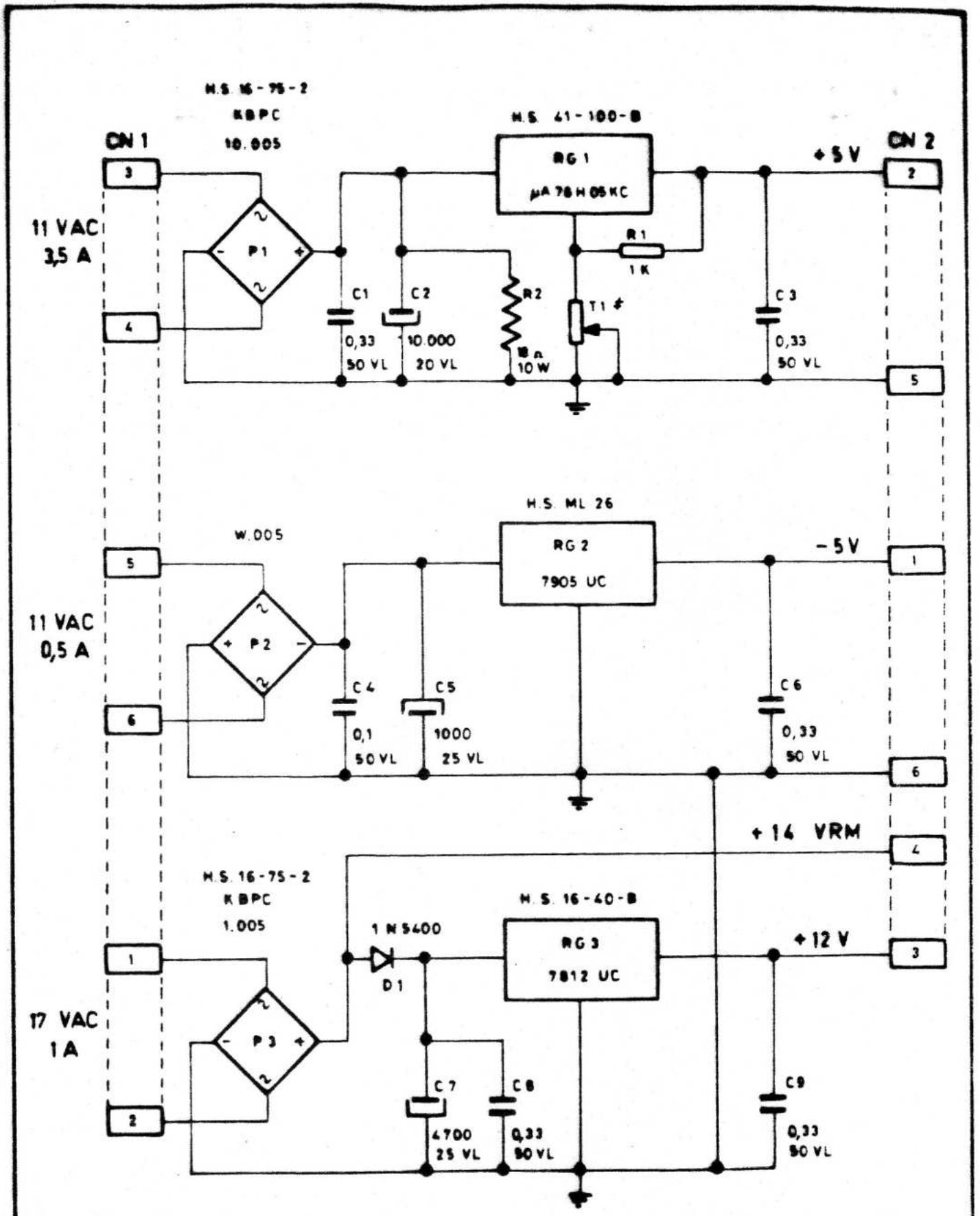

* . 47 Ω TRIMMER or 22 Ω 1/4 W 5% RESISTOR

F.LLI ZACCARIA s.n.c.

Via Jungaro 15 40012 CALDERARA DI RENO (Bo) Italy

PART NAME				PART NO
POWER BOARD 1B1126 (SEC 832)				1B 1126-A
DWN	DATE	REV	DATE REV	SHEET
				-1-

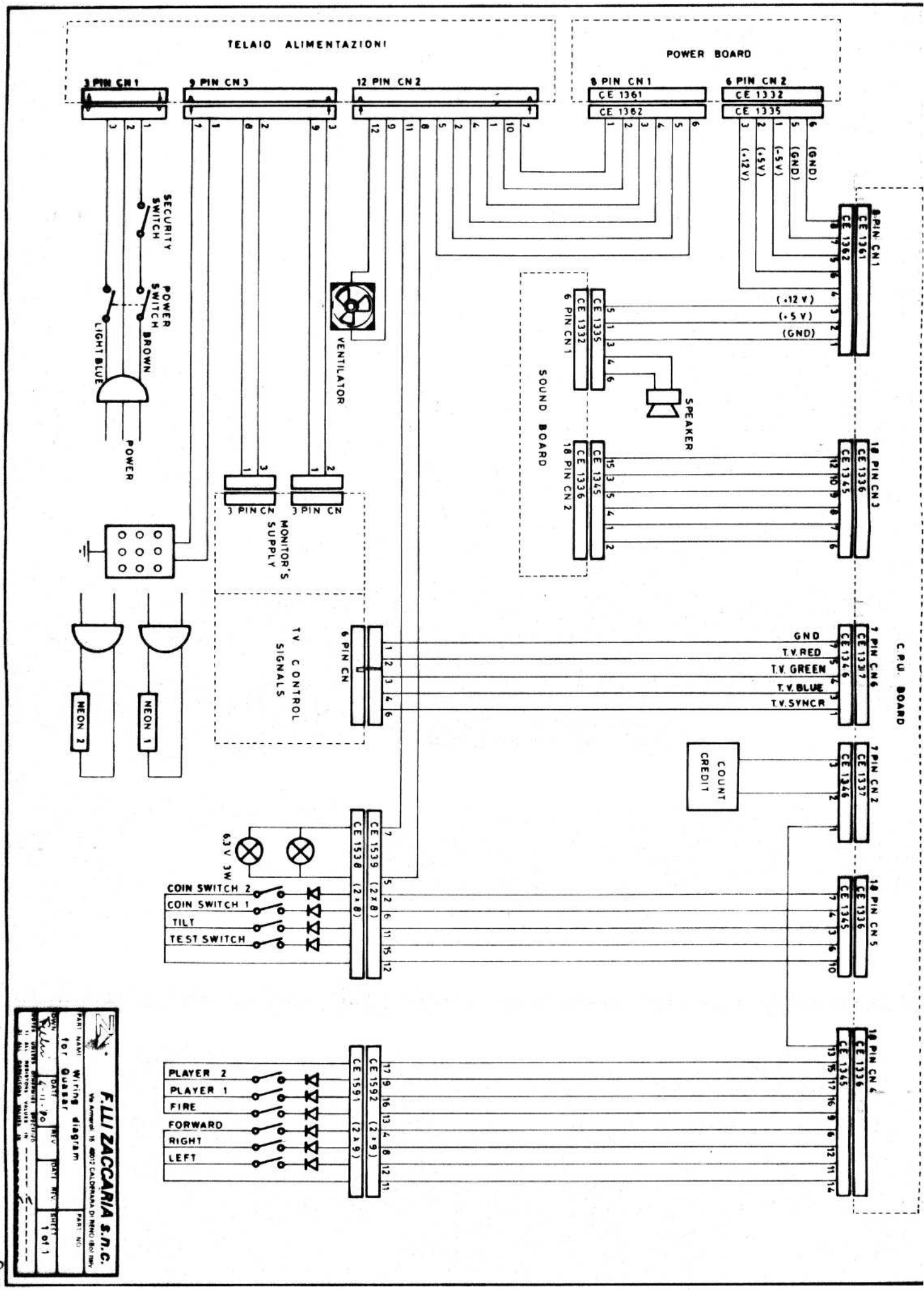
TELAIO ALIMENTAZIONI
POWER BOARD
3 PIN CN 1
9 PIN CN 3
12 PIN CN 2
8 PIN CN 1
CE 1361
CE 1362
6 PIN CN 2
CE 1332
CE 1335
(GND)
(-5V)
(GND)
(+5V)
(-12V)
SECURITY SWITCH
POWER SWITCH
BROWN
LIGHT BLUE
POWER
VENTILATOR
8 PIN CN 1
CE 1361
CE 1362
(+12 V)
(+5 V)
(GND)
SOUND BOARD
6 PIN CN 1
CE 1332
CE 1335
SPEAKER
18 PIN CN 2
CE 1336
CE 1345
10 PIN CN 3
CE 1336
CE 1345
3 PIN CN
3 PIN CN
MONITOR'S SUPPLY
TV CONTROL SIGNALS
6 PIN CN
NEON 2
NEON 1
GND
T.V. RED
T.V. GREEN
T.V. BLUE
T.V. SYNCR
7 PIN CN 6
CE 1337
CE 1346
C.P.U. BOARD
COUNT CREDIT
7 PIN CN 2
CE 1337
CE 1346
6.3 V 3W
CE 1539 (2x8)
CE 1538 (2x8)
COIN SWITCH 2
COIN SWITCH 1
TILT
TEST SWITCH
10 PIN CN 5
CE 1336
CE 1345
10 PIN CN 4
CE 1336
CE 1345
PLAYER 2
PLAYER 1
FIRE
FORWARD
RIGHT
LEFT
CE 1592 (2x9)
CE 1591 (2x9)
F.LLI ZACCARIA s.n.c.
PART NAME Wiring diagram for Quasar
DATE 4-11-70
SHEET 1 of 1

30